SANYANG®

CABINETRY

ANQIAN STREET,BEILUO INDUSTRY AREA,
SHOUGUANG, SHANGDONG, CHINA

0086- 5365109511
0086- 5365598016
email to:
salesfan@sanyangwood.cn
kitchencabinetmanager@gmail.com
WWW. sanyangwood.cn

EDITION 2018

SANYANG®

SANYANG
WOOD INDUSTRY CO.,LTD.

Member NKBA National Kitchen & Bath Association

Table of Contents

Wall Cabinets
. . . . . 5 — 11

Base Cabinets
. . . . . 12 — 15

Pantries
. . . . . 16 — 17

Vanities
. . . . . 18 — 19

Moulding
. . . . . 20 — 21

Filler & Panels
. . . . . 22 — 23

Accessories
. . . . . 24 — 25

Price I ist
. . . . . 26 — 31

About us

SANYANG

ABOUT
SANYANG CABINETRY

Certificate Number: 17133
Issue Date: October 30, 2017

LISTING

CERTIFICATE

THIS CERTIFIES THAT

Skyline Cabinetry
Farmers Branch, TX

is a current participant in the Kitchen Cabinet Manufacturers Association Certification Program and is manufacturing the following lines of kitchen cabinets and/or bathroom vanity cabinets in conformance with American National Standard ANSI/KCMA A161.1-2017, *Performance and Construction Standard for Kitchen and Vanity Cabinets*:

Factory Assembled

Charleston Saddle	Shaker Espresso	Shaker White
Charleston White	Shaker Grey	

These cabinet lines are listed in the Kitchen Cabinet Manufacturers Association Directory of Certified Cabinet Manufacturers. This manufacturer is authorized to apply KCMA Certification Seals to the kitchen and bath cabinet lines listed above.

This certificate may be updated at any time and will expire on the date listed above. This certificate may also be canceled for non-conformity with the requirements of the Certification Program or upon voluntary withdrawal from the program by the manufacturer.

Charles P. Arnold
Director of Certification

This certificate is current as of the issue date
Current listing information is at www.kcma.org

Certificate – Сертификат – 證明書 – Certificat – 인증서 – شهادة

Certificate of Compliance

No. OE180419-SSWUD03
Test Report no. MICEE-2018041201-CTNE

Certificate's Holder: Shouguang Sanyang Wood Industry Co., Ltd.
South of Anyang Street, East of Tegang Road, Shouguang, Shandong, China

Certification ECM Mark: Type Approved

Product: Plywood / MDF / Film faced plywood / Particle board

Model(s): Plywood 2-25mm
MDF 2-25mm
Film Faced Plywood 9/12/15/18/21/25mm
Particle Board 9/12/15/16/18/21/25mm

Verification to: Standard:
EN 13986:2004+A1:2015

related to CE Directive(s):
R 305/2011 (Regulation for the Marketing of Construction Products)

Remark: The product(s) has been verified on a voluntary basis. The product(s) satisfies the requirements of the Certification Mark of ECM, in reference to the above listed Standard(s). The above Compliance Mark can be affixed on the product(s) accordingly to the ECM regulation about its release and its use. The regulation can be found at www.enteceramo.it. This Certificate of Compliance can be checked for validity at www.enteceramo.it
This verification doesn't imply assessment of the production of the product(s).

Additional information, clarification about the CE Marking:
We attest that a TCF for the CE Marking process is in place. Whereas the Manufacturer is Responsible to start the CE Marking Certification Procedure through an appointed Notified Body and the perform all the necessary activities, as required by the Directive and accepted by the Notified Body, before placing the CE Mark on the product(s).

Date of issue 19 April 2018 — Expiry date 18 April 2023

Chief Manager — Deputy Manager Amanda Dayne

Ente Certificazione Macchine Srl
Via Ca' Bella, 243 – Loc. Castello di Serravalle – 40053 Valsamoggia (BO) - ITALY
+39 051 6705141 +39 051 6705156 info@enteceramo.it www.enteceramo.it

Registration No. 016140127681R

ZRX

QUALITY MANAGEMENT SYSTEM CERTIFICATE

The certificate information is available on the CNCA of the official website (www.cnca.gov.cn)

This is to certify that the quality management system of
SHOUGUANG SANYANGWOOD INDUSTRY CO., LTD.

Which is in conformity with
ISO9001:2015
This certificate covers the following scope of

PRODUCE AND SALES FOR SOLID WOOD FURNITURE AND PANEL BOARD FURNITURE, SALES FOR PLYWOOD, MDF, PARTICLE BOARD, BLOCKBOARD

This certificate will not remain valid unless and until the certified customer's accepts at least once surveillance audit annually within the validity period of the certificate and the surveillance audit conforming mark is affixed to the designated place on the certificate. Please login into www.zrxhy.com for the certificate's validity status.

Issue Date: Dec-06-2016 Expiration Date: Dec-06-2019 End

Issued by: X.R. Zhang

Beijing Zhongxin Xing Certification Co., Ltd.

ZRX ISO9001 — IAF — CNAS

CERTIFICATE OF REGISTRATION

This is to certify that

Shouguang Sanyang Wood Industry Co., Ltd.

South of Anyang Street, East of Tegang Road, Shouguang, Weifang, Shandong, 262700, CHINA

Complies with the requirements of
FSC Standard for Chain of Custody Certification

for the following scope of registration

Tracking of wood based material
Product types: Indoor furniture W12, Plywood W8.1.2, Particleboard W8.2, Medium-density fibreboard (MDF) W8.3.2
Claim: FSC 100%, FSC Mix
System(s) used: Transfer
Certificate type: Single site
Standard(s) version: FSC-STD-40-004 V3-0 and FSC-STD-50-001 V2-0

SAI Certificate No.:	FCOC41077	Issue Date:	19 April 2018
FSC Code:	SAI-COC-002927	Original Certification Date:	16 April 2018
SAI File Number:	AS566271	Current Certification Date:	16 April 2018
		Certificate Expiry Date[1]:	15 April 2023
		Issue Number:	1

Nicole Grantham
General Manager SAI Global Certification Services

FSC www.fsc.org — The mark of responsible forestry — FSC® A000510

SAI GLOBAL

SANYANG WOOD INDUSTRY CO.,LTD.

Cabinet Construction

1. Full overlay panel, ¾ inch thick solid wood
2. 6-way adjustable European-style hinge with soft-close feature
3. Shelving is ¾ inch thick cabinet-grade plywood with front edge banding
4. Dovetail drawers with solid wood on all sides, full extension
5. Under-mount full extension drawer glides with soft-close feature
6. ½ inch cabinet-grade plywood box, UV coated natural plywood on interior
7. Bracket reinforcements for base cabinet
8. Double-doweled face frame joint
9. Hardwood face frame
10. Door bumpers

Door Styles

SW
Shaker White

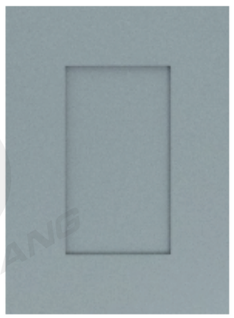

GR
Shaker Gray

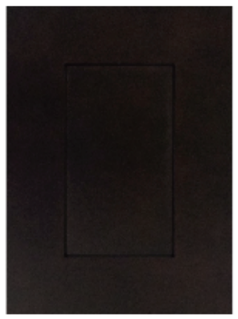

SE
Shaker Espresso

FW
Floral White
(Builder Grade)

CW
Charleston White

CS
Charleston Saddle

Hoe to Order

To order:

Specify the 2-letter door style *(shown on the inside front cover of this book)*, followed by the product number for the cabinet.

Example: **GR-W1812GD** would be the product number to use to order a Shaker Gray (**GR**) Wall Cabinet, 12″ high, 18″ wide and 12″ deep with a Single Glass Door *(shown on page 3)* (**W1812GD**).

GR
Shaker Gray

Wall Cabinet Single Glass Doors, 12″H

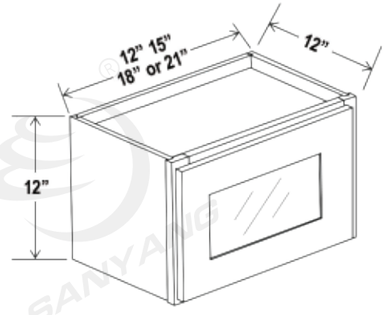

Clear glass included

W1212GD
W1512GD
W1812GD
W2112GD

Wall Cabinet Specifications

Wall Cabinet Single Glass Doors, 12″H

W1212GD
W1512GD
W1812GD
W2112GD

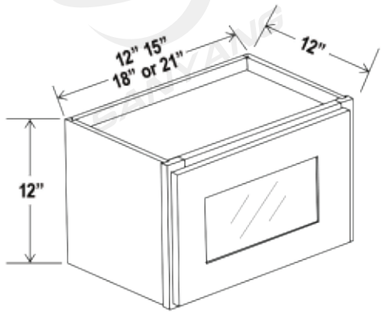

Clear glass included

Wall Cabinet Double Glass Doors, 12″H

W2412GD
W2712GD
W3012GD
W3312GD
W3612GD

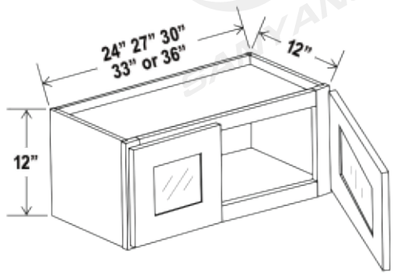

Clear glass included

Wall Cabinet Double Doors, 12″ H

W3012
W3312
W3612

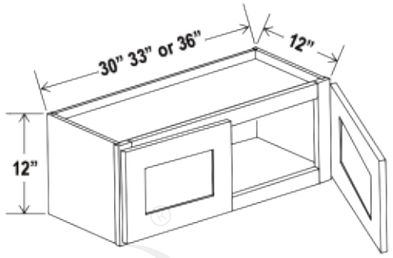

No shelf

Wall Cabinet Double Doors, 15″ H

W3015
W3315
W3615

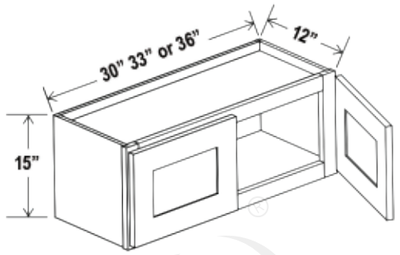

No shelf

Wall Cabinet Double Doors, 18″ H

W3018
W3318
W3618

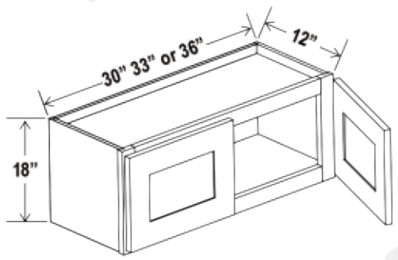

No shelf

Wall Cabinet Double Glass Doors, 18″ H

W3018GD

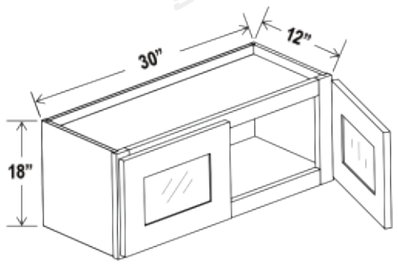

Clear glass included

Wall Cabinet Specifications

Wall Cabinet Double Doors, 24″ H

W3024
W3324
W3624

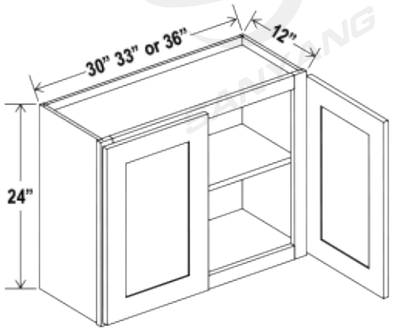

One adjustable shelf

Wall Cabinet Single Door, 30″ H

W0930
W1230
W1530
W1830
W2130

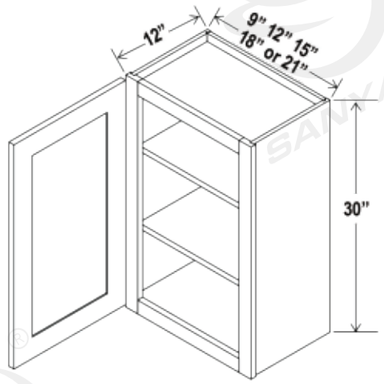

Two adjustable shelves

Wall Cabinet Single Glass Door, 30″ H

W1530GD
W1830GD

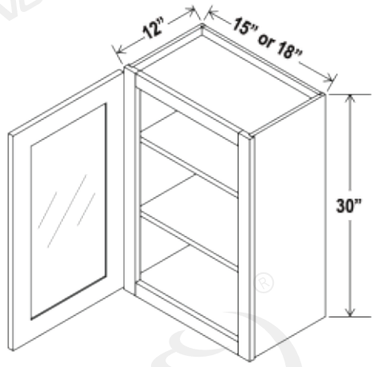

Clear glass included

Wall Cabinet Double Doors, 30″ H

W2430
W2730
W3030
W3330
W3630
W3930

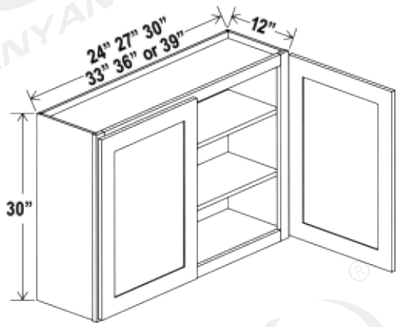

Two adjustable shelves

Wall Cabinet Double Glass Doors, 30″ H

W2430GD
W3030GD

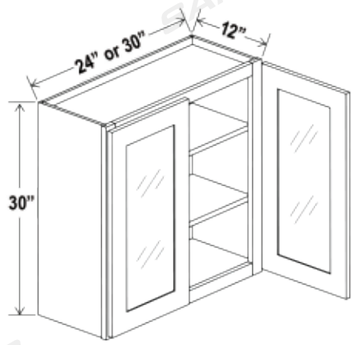

Clear glass included

Wall Cabinet Single Door, 36″ H

W0936
W1236
W1536
W1836
W2136

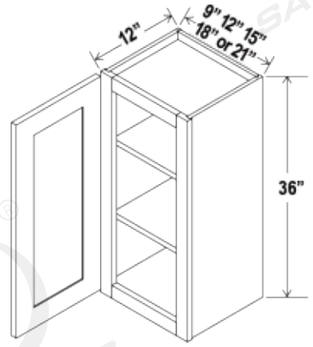

Clear glass included

Wall Cabinet Specifications

Wall Cabinet Single Glass Door, 36″ H

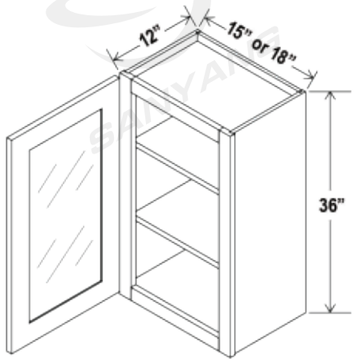

W1536GD
W1836GD

Clear glass included

Wall Cabinet Double Doors, 36″H

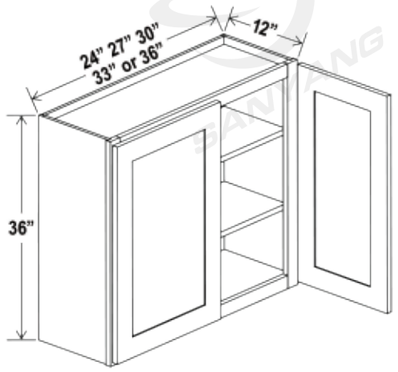

W2436
W2736
W3036
W3336
W3636

Two adjustable shelves

Wall Cabinet Double Glass Doors, 36″ H

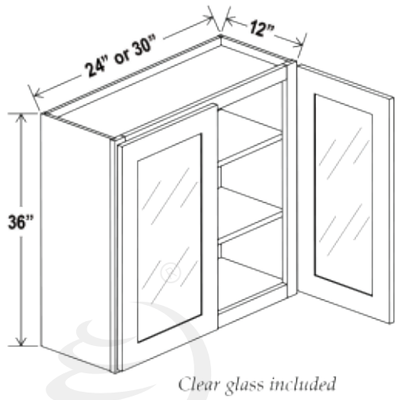

W2436GD
W3036GD

Clear glass included

Wall Cabinet Single Door, 42″H

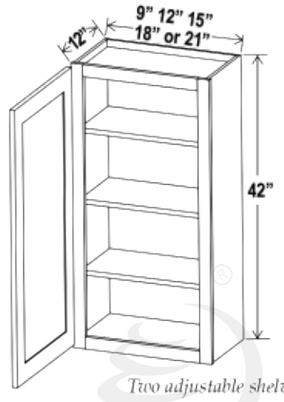

W0942
W1242
W1542
W1842
W2142

Two adjustable shelves

Wall Cabinet Single Glass Door, 42″ H

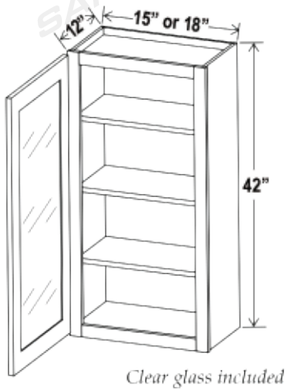

W1542GD
W1842GD

Clear glass included

Wall Cabinet Double Doors, 42″ H

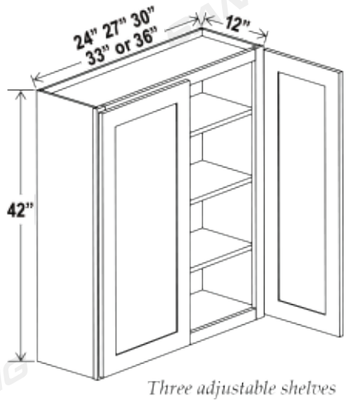

W2442
W2742
W3042
W3342
W3642

Three adjustable shelves

Wall Cabinet Specifications

Wall Cabinet Double Glass Doors, 42″ H

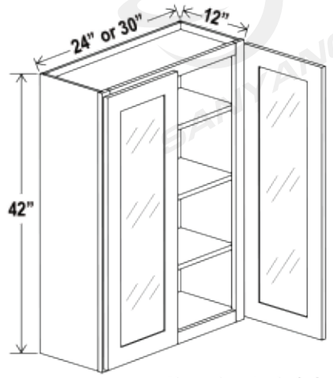

W2442GD
W3042GD

Clear glass included

Diagonal Corner Wall Glass Door

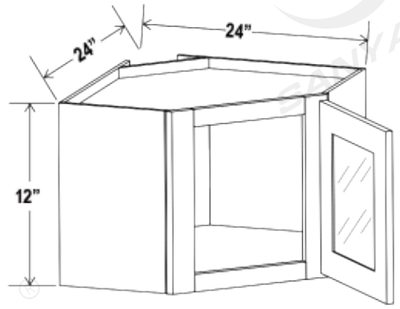

DCW2412GD

Clear glass included

Diagonal Corner Wall Glass Door

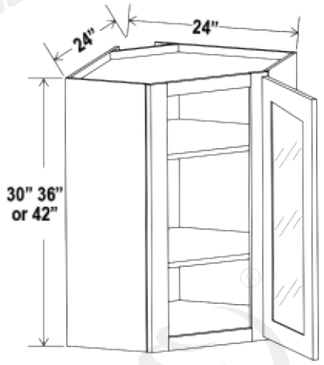

DCW2430GD
DCW2436GD
DCW2442GD

Clear glass included

Diagonal Corner Wall Single Door

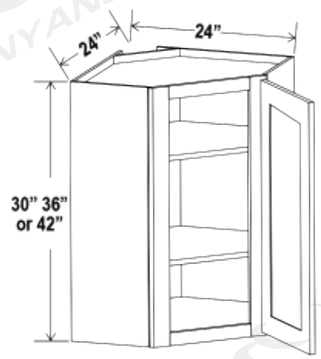

DCW2430
DCW2436
DCW2442

Two adjustable shelves

Diagonal Corner Wall Glass Door

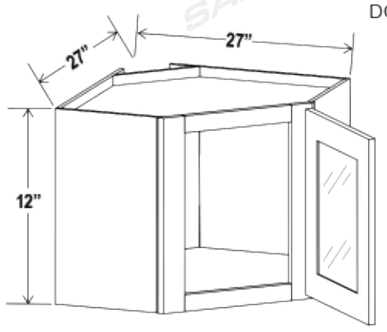

DCW2712GD

Clear glass included

Diagonal Corner Wall Single Door

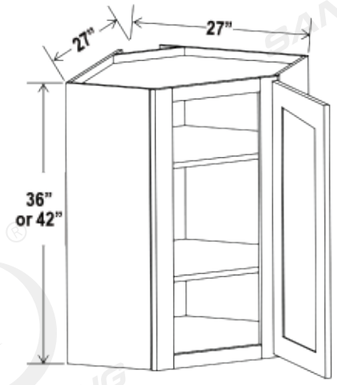

DCW2736
DCW2742

Two adjustable shelves

Angle Wall Cabinet

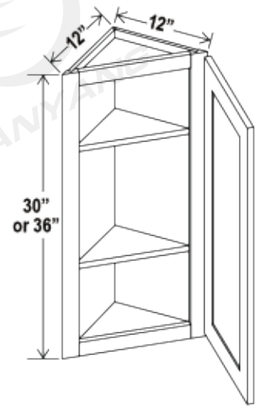

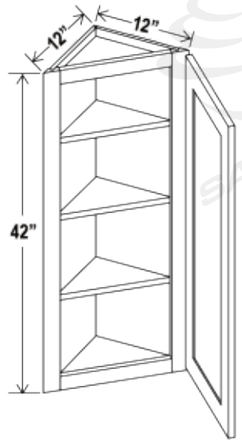

AW1230
AW1236
AW1242

Wall Blind Corner Cabinet, 30″ H

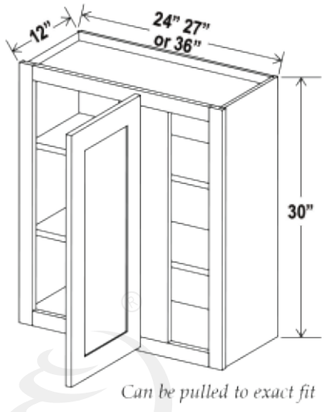

WBC2430
WBC2730
WBC3630

Wall Blind Corner Cabinet, 36″ H

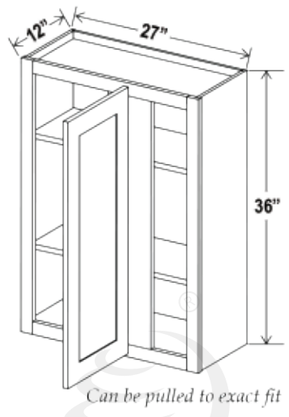

WBC2736

Wall Blind Corner Cabinet, 42″ H

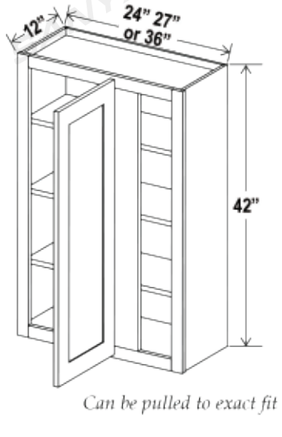

WBC2442
WBC2742
WBC3642

Refrigerator Wall Cabinet Double Doors

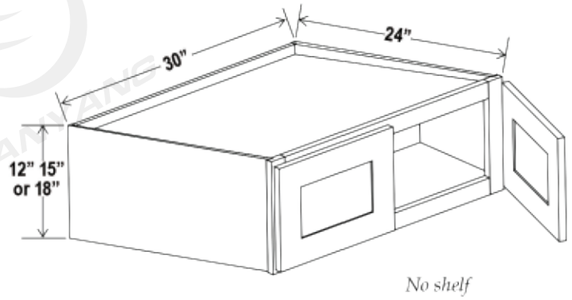

W301224
W301524
W301824

Refrigerator Wall Cabinet Double Doors

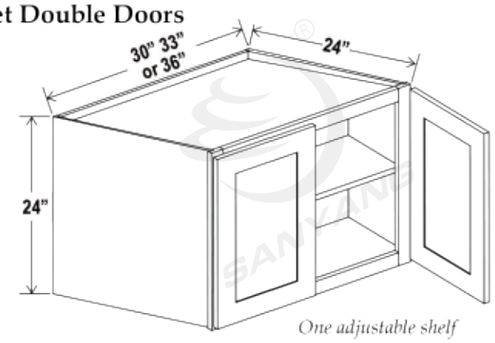

W302424
W332424
W362424

Refrigerator Wall Cabinet Double Doors

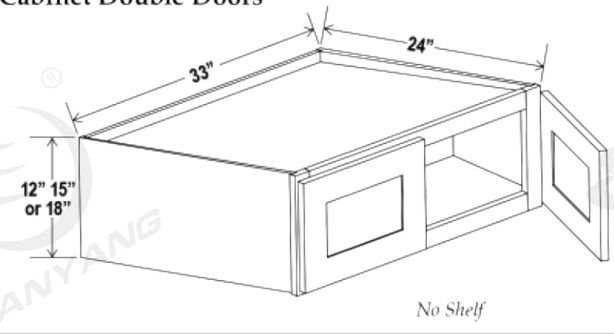

W331224
W331524
W331824

Refrigerator Wall Cabinet Double Doors

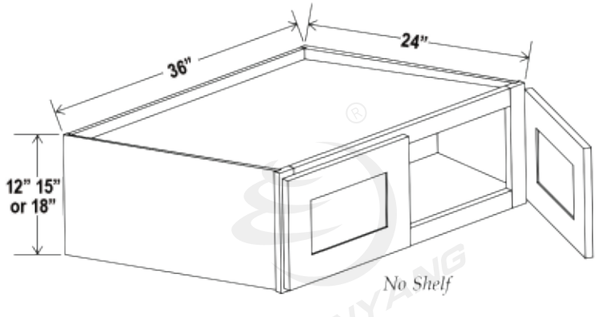

W361224
W361524
W361824

Wall Cabinet Specifications

Microwave Wall Cabinet

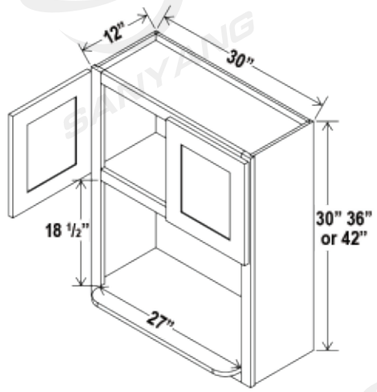

MO3030
MO3036
MO3042

Open End Shelf

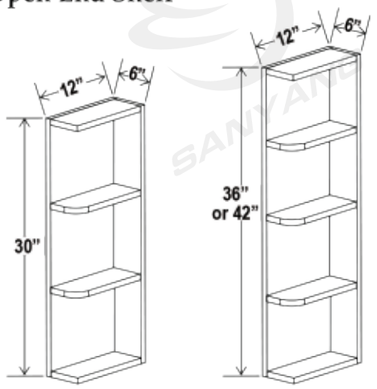

OE630
OE636
OE642

Matching color interior

Plate Rack

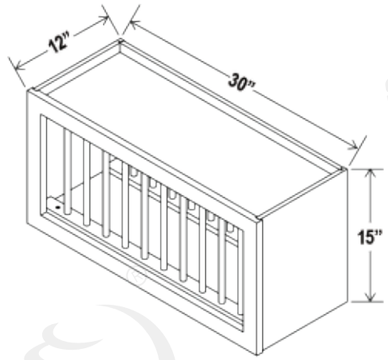

PR3015

10 plate slots

Wall Spice Drawer

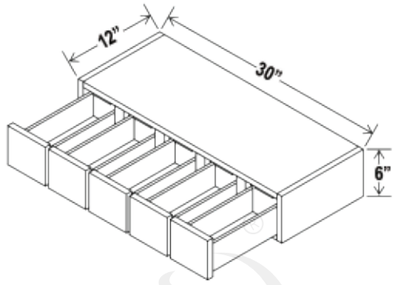

WSD630

5 drawers

Wine Rack

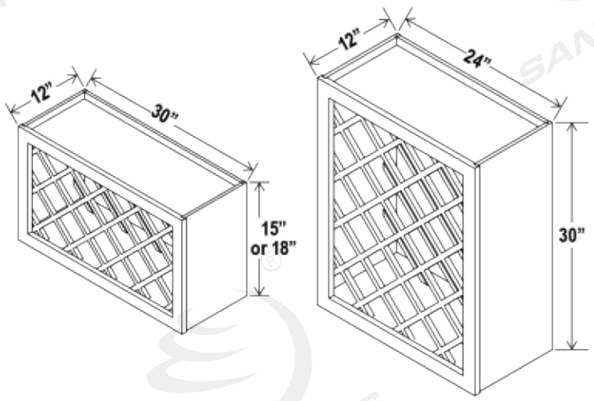

WRC3015
WRC3018
WRC2430

Can install vertically or horizontally

Base Cabinet Specifications

Base Cabinet Single Door, 30″ H

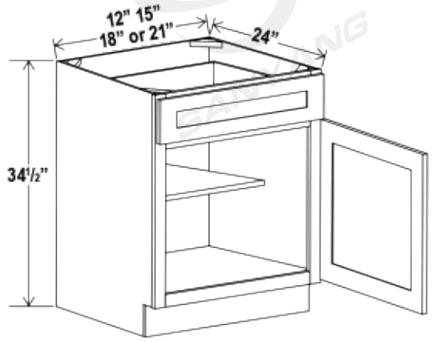

B12
B15
B18
B21

One drawer

Base Cabinet Double Doors

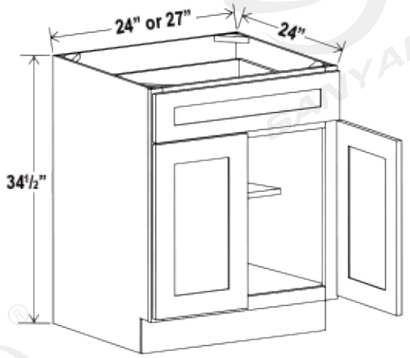

B24
B27

One drawer

Base Cabinet Double Doors

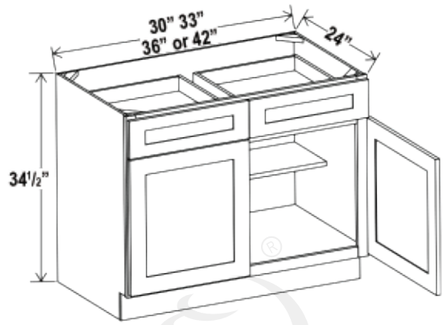

B30
B33
B36
B42

Two drawers

Drawer Base

3DB12
3DB15
3DB18
3DB21
3DB24
3DB30
3DB36

Document File Base Cabinet

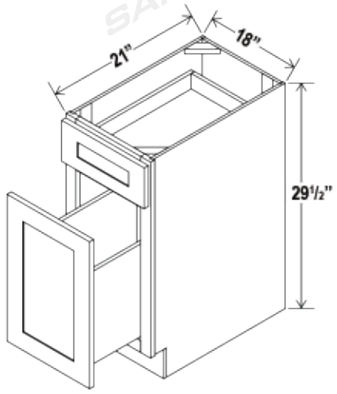

DFB18

Blind Corner Base Cabinet

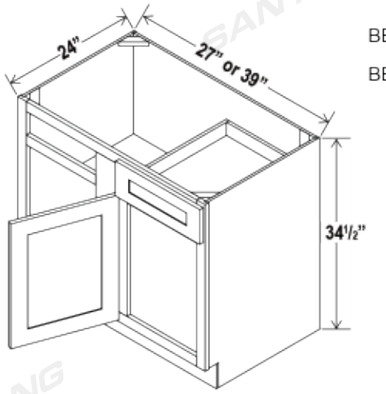

BBC36
BBC42

BBC36 install range 36″-42″
BBC42 install range 43″-46″

Sink Base

SB27

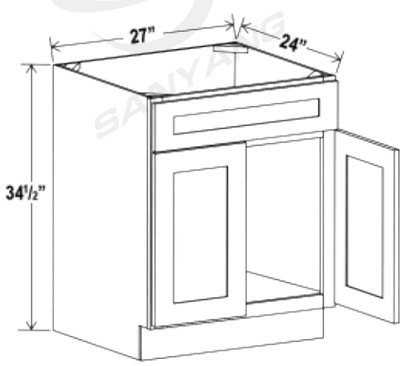

One dummy drawer

Sink Base

SB30
SB33
SB36

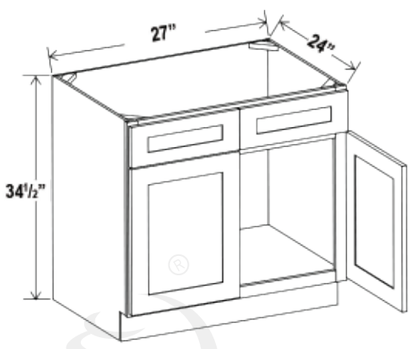

Two dummy drawers

Farmhouse Sink Base

FSB36

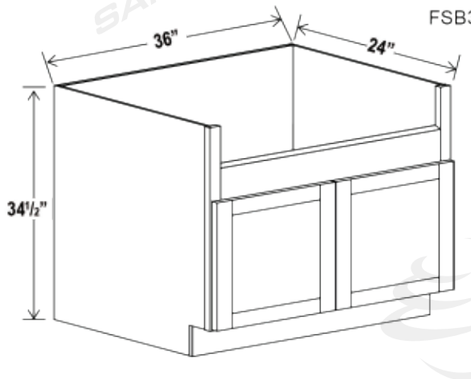

Corner Sink Base Cabinet

CSB36

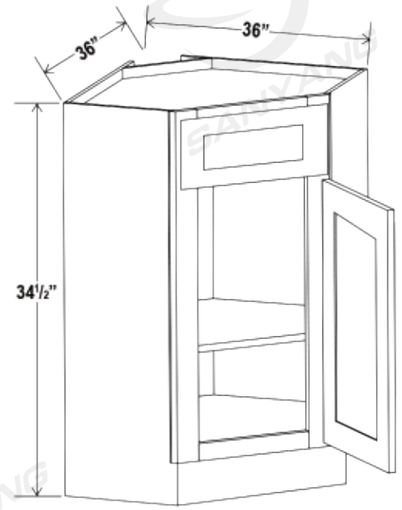

One dummy drawer

Corner Sink Front Floor

SBF4242

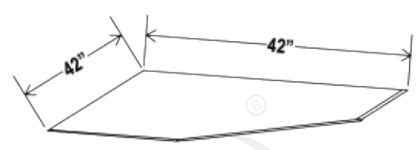

For use with DCSF42

Corner Sink Base Front

DCSF42

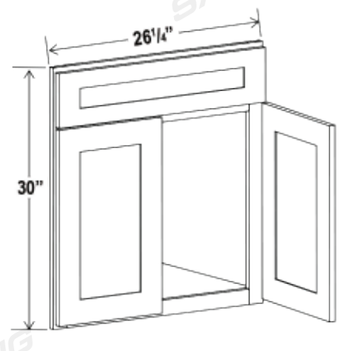

For use with SBF4242

Base Cabinet Specifications

Base Cabinets

Easy Reach Base Cabinet

ERB33
ERB36

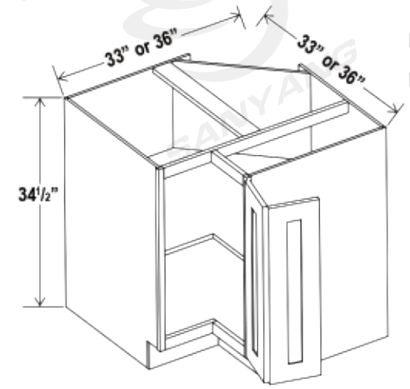

One bi-fold door

Lazy Susan Cabinet

LSB33-W
LSB36-W
LSB33-C
LSB36-C

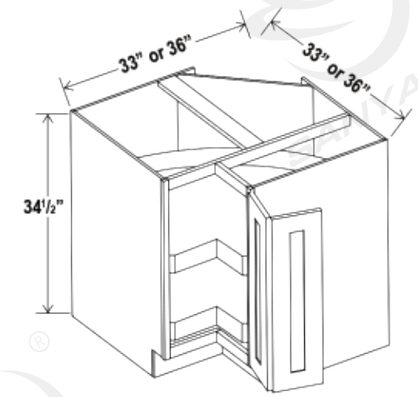

-W: Two wooden trays -C: Two chrome trays

Base End Cabinet

BEC24

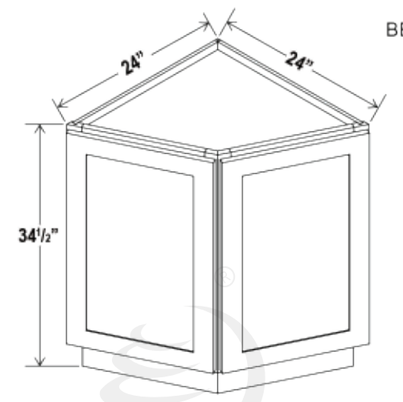

Base End Shelf

BES12

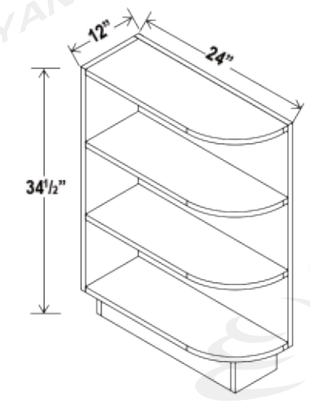

Base Tray

BT09

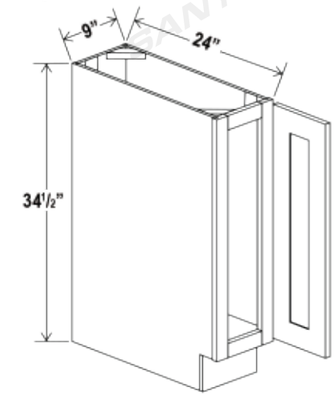

Base Waste Basket Cabinet

BWB18

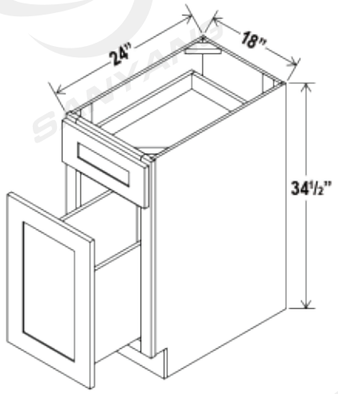

Microwave Base Cabinet

MB33

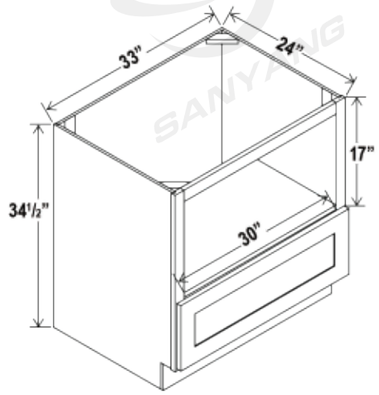

Spice Pull Base Cabinet

SPB6

SPB9

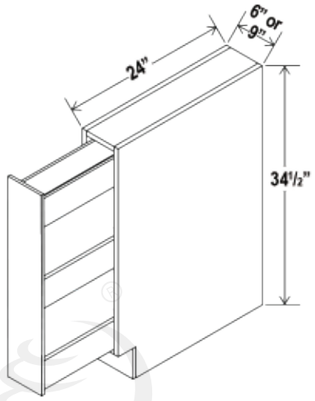

Base Spice Drawer

BSDC6

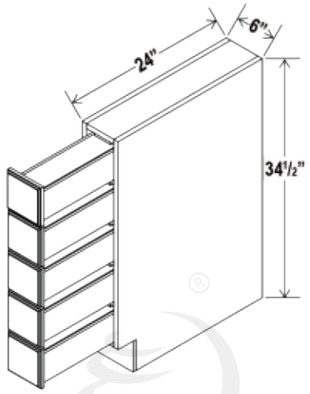

Utility Pantry

U188424

U189024

U189624

Two adjustable top shelves • Three bottom shelves
Note: Roll out shelf kits available for utility cabinets. See page 24.

Utility Pantry

U248424

U249024

U249624

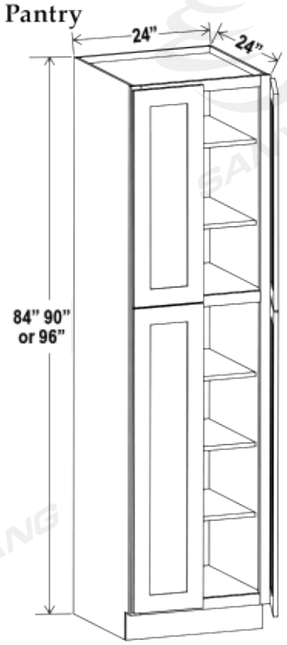

Two adjustable top shelves • Three bottom shelves
Note: Roll out shelf kits available for utility cabinets. See page 24.

Utility Pantry

U308424

U309024

U309624

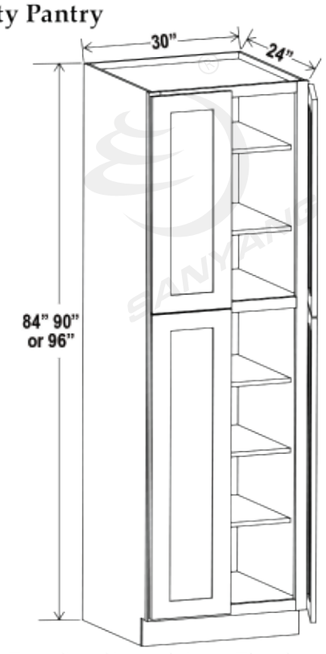

Two adjustable top shelves • Three bottom shelves
Note: Roll out shelf kits available for utility cabinets. See page 24.

Tall Pantry Cabinet Specifications

Oven Pantry

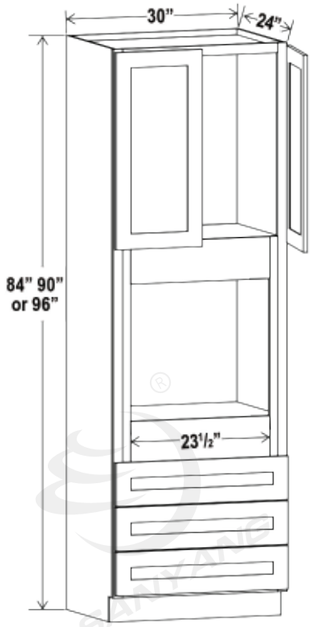

O308424
O309024
O309624

Two doors • One large open shelf • Three bottom drawers
Note: Drawers may be removed to accommodate double ovens.

Oven Pantry

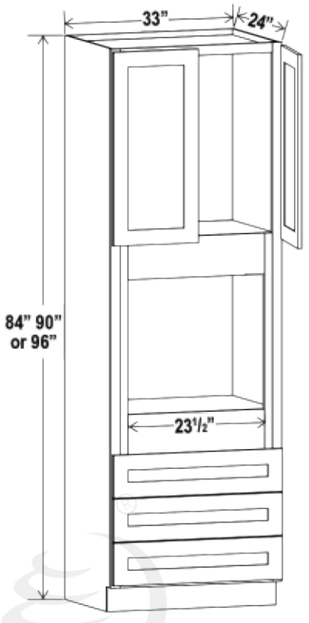

O338424
O339024
O339624

Two doors • One large open shelf • Three bottom drawers
Note: Drawers may be removed to accommodate double ovens.

Pantries

Vanity Cabinet Specifications

Vanity Sink Base

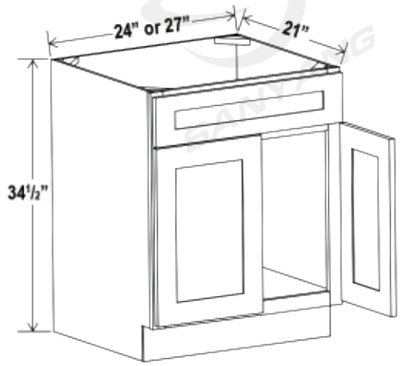

VS24
VS27

1 dummy drawer

Vanity Sink Base

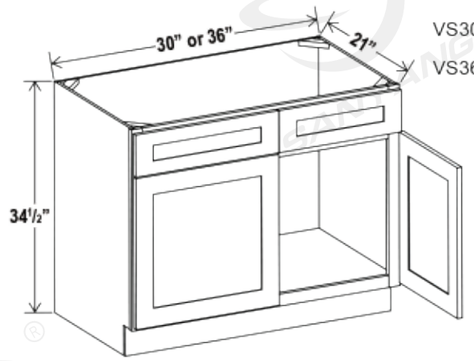

VS30
VS36

Two dummy drawers

Vanity Drawer Base Cabinet

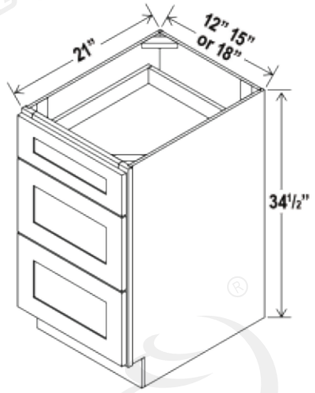

3VDB12
3VDB15
3VDB18

Vanity Combo

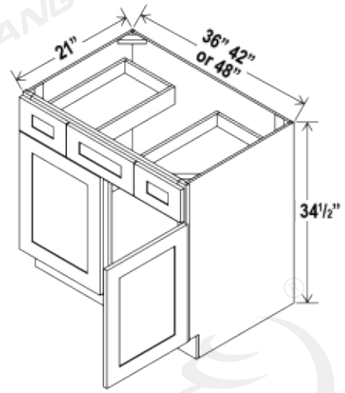

VSD36
VSD42
VSD48

Vanities

Vanity Combo

V3021DL

V3021DR

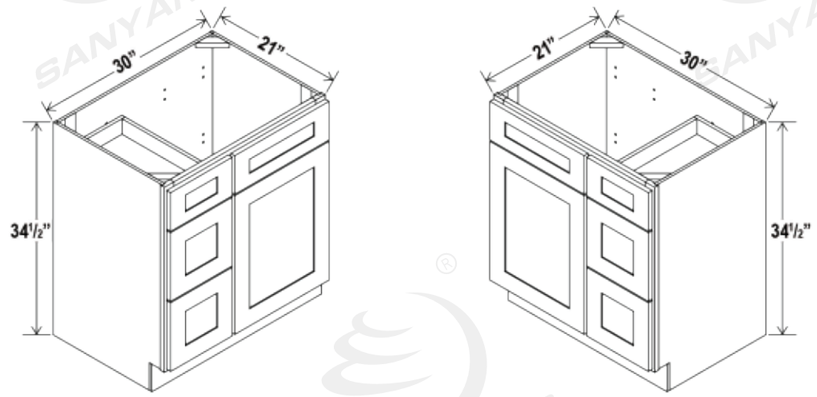

V3021DL: 30" combo with drawers on left • V3021DR: 30" combo with drawers on right

Vanity Combo

V3621DL

V3621DR

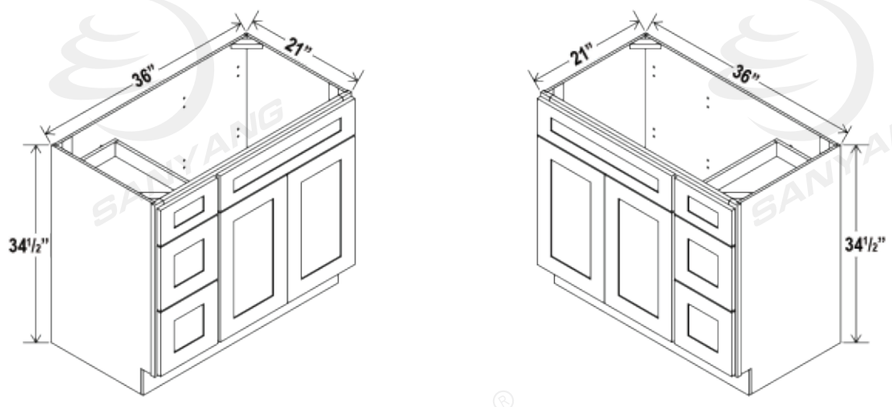

V3621DL: 36" combo with drawers on left • V3621DR: 36" combo with drawers on left right

Rope Moulding

ROPE

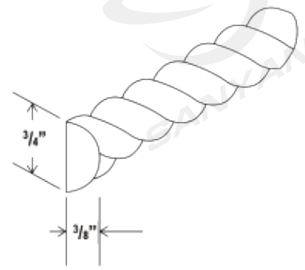

Dentil Moulding

DMTIS

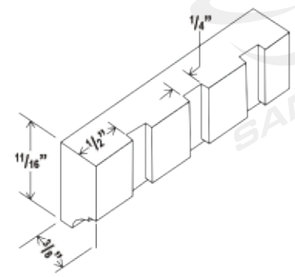

Funiture Base

FBM

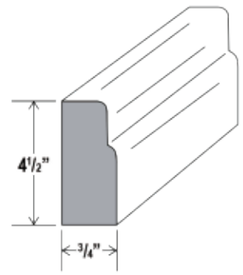

Cove Crown Moulding

COV

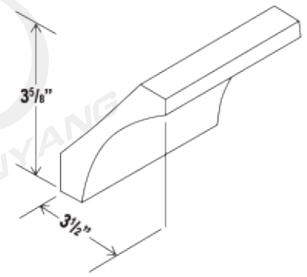

Decorative Moulding

BCM8(DCM)

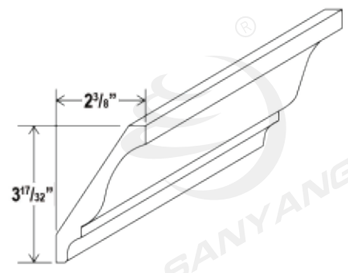

Crown Moulding

CM8

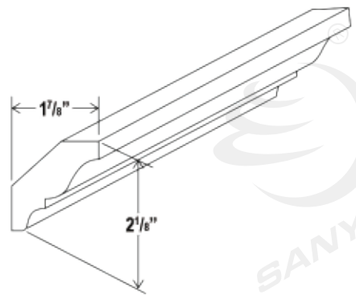

Inset Crown Moulding

RCM4S(LCM)

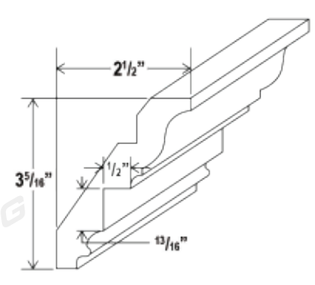

Angle Crown Moulding

ACM8

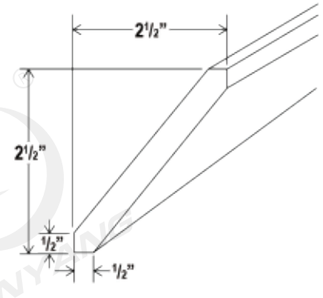

Angle Light Rail Moulding

ALRM8

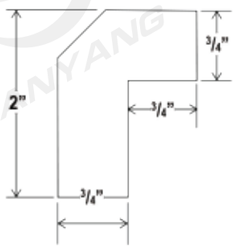

Light Rail Moulding

LRM8

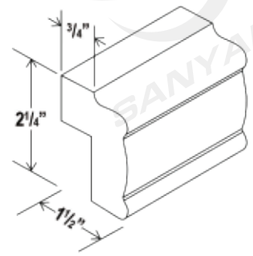

Outside Corner Moulding

OCM8

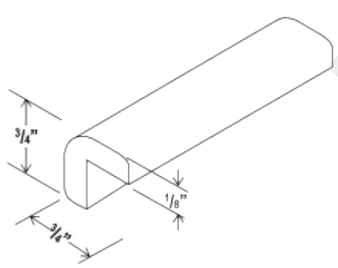

Shoe Moulding

SHM

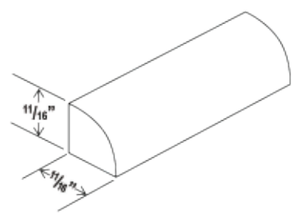

Scribe Moulding

SM8(SCR)

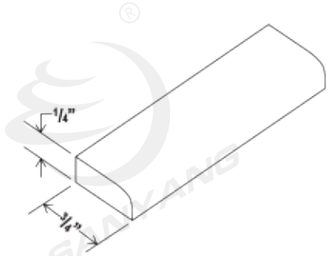

Batten Moulding

BAM

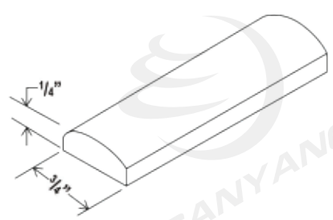

Toe Kick

TKC

Tall Fluted Filler

FF396

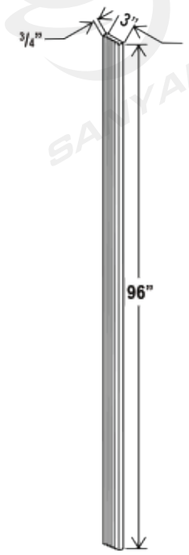

Tall Filler

F396
F696

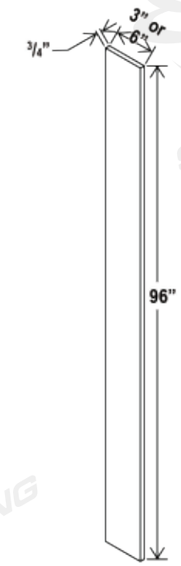

Filler

F342
F642

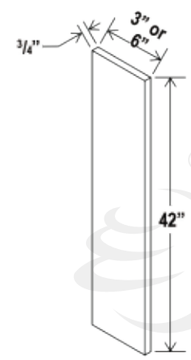

Bead Board Panel

BBFPV4296

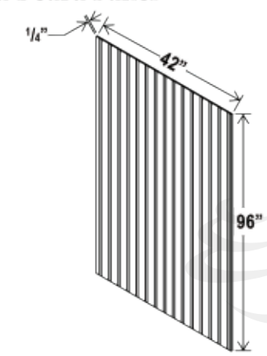

Finish Plywood Panel

FPV4296

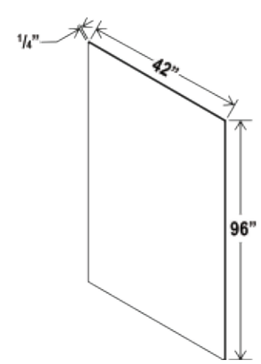

Tall Skin Veneer Panel

USV2496

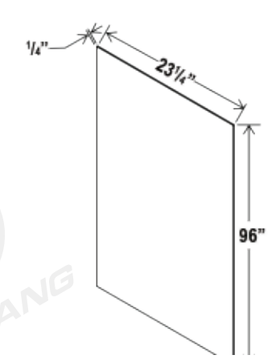

Base Skin Veneer Panel

BSV

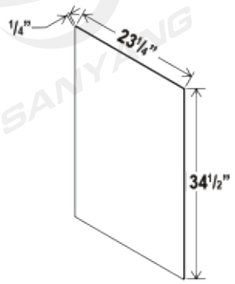

Wall Skin Panel

WSV42

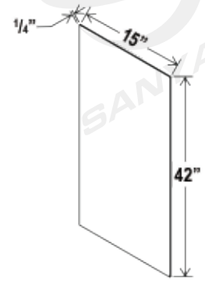

Tall Decorative Door Panel

TDEP2484
TDEP2490
TDEP2496

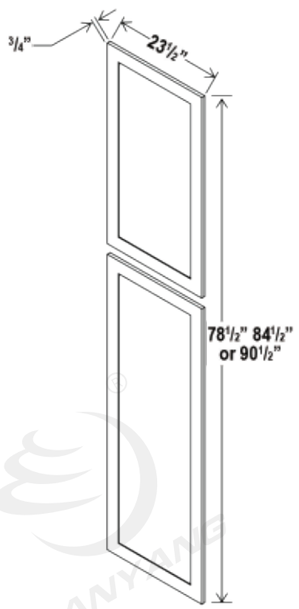

Wall Decorative Door Panel

WDEP30
WDEP36
WDEP42

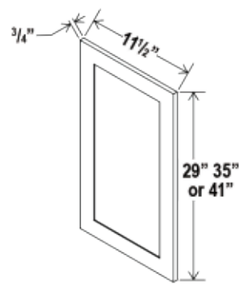

Base Decorative Door Panel

BDEP

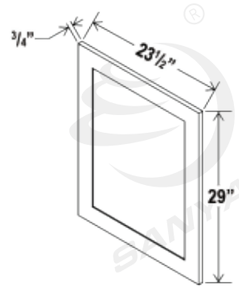

Dishwasher Return Panel

DWR3

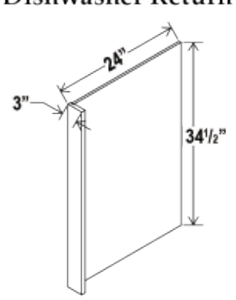

Finished on both sides

Refrigerator End Panel

REPV2496
REPV2796

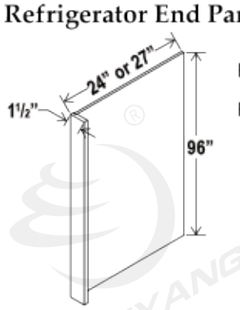

Finished on both sides

Shelf Board

S2496

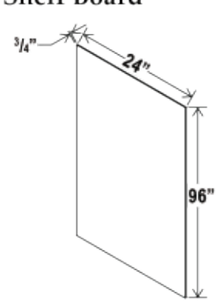

Finished on both sides

Corbel

CB9

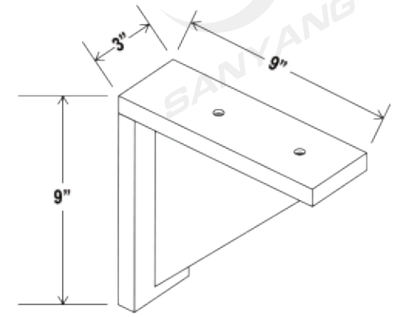

Corbel

CBT

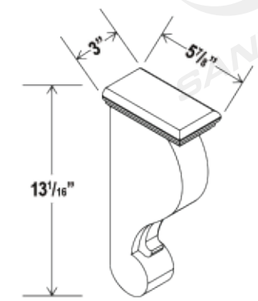

Classic Decorative Leg

CLDL

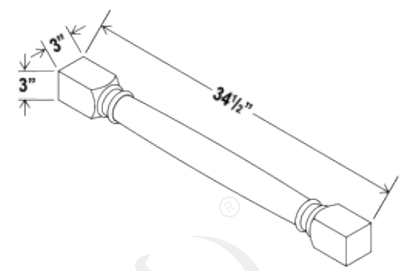

Fluted Decorative Leg

FLDL

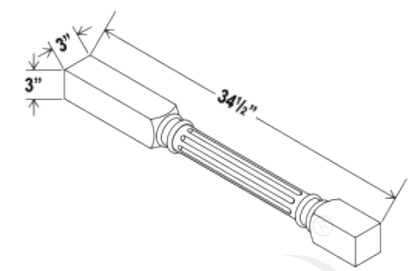

Glass Holder

SGH30

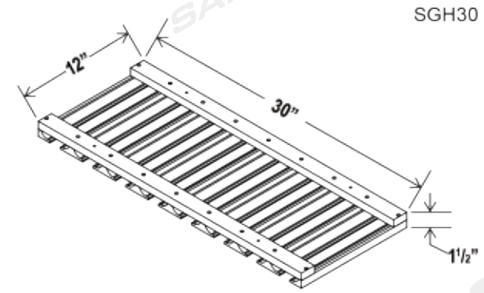

Knee Drawer

VKD36

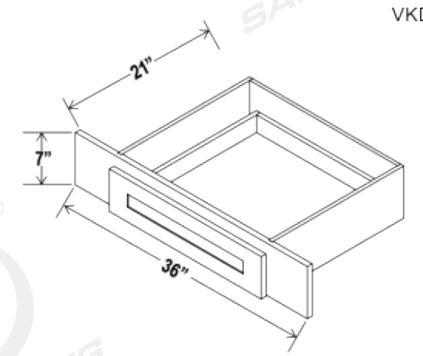

Accessories

Sample Door

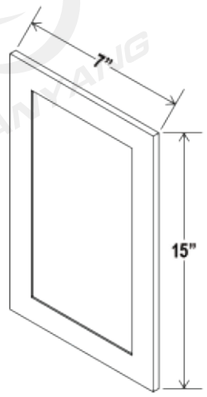

SD

Hood

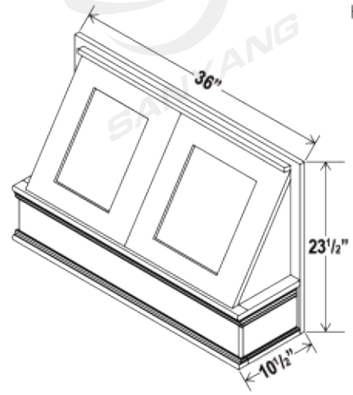

Hood

Roll Out Tray

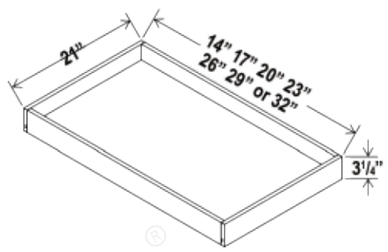

RS18
RS21
RS24
RS27
RS30
RS33
RS36

Arched Valance

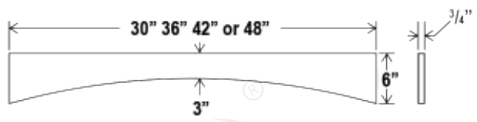

VA30
VA36
VA42
VA48

Skyline Cabinetry Price List

WALL CABINETS

WALL CABINETS - 12"H

ITEM	PRODUCT DESCRIPTION	WEIGHT	CUBE	CW / CS	SE	SW / GR	FW
W1212GD	Wall Cabinet - 12"W x 12"H x 12"D - 1D	8	0.2				
W1512GD	Wall Cabinet - 15"W x 12"H x 12"D - 1D	10	0.4				
W1812GD	Wall Cabinet - 18"W x 12"H x 12"D - 1D	12	0.5				
W2112GD	Wall Cabinet - 21"W x 12"H x 12"D - 1D	14	0.6				
W2412GD	Wall Cabinet - 24"W x 12"H x 12"D - 2D	16	0.8				
W2712GD	Wall Cabinet - 27"W x 12"H x 12"D - 2D	18	1.0				
W3012	Wall Cabinet - 30"W x 12"H x 12"D - 2D	20	1.2				
W3012GD	Wall Glass Door Cabinet - 30"W x 12"H x 12"D - 2D	30	1.2				
W3312	Wall Cabinet - 33"W x 12"H x 12"D - 2D	24	1.4				
W3312GD	Wall Glass Door Cabinet - 33"W x 12"H x 12"D - 2D	32	1.4				
W3612	Wall Cabinet - 36"W x 12"H x 12"D - 2D	28	1.6				
W3612GD	Wall Glass Door Cabinet - 36"W x 12"H x 12"D - 2D	34	1.6				
W3912	Wall Cabinet - 39"W x 12"H x 12"D - 2D	36	1.6				

WALL CABINETS - 15"H

ITEM	PRODUCT DESCRIPTION	WEIGHT	CUBE	CW / CS	SE	SW / GR	FW
W3015	Wall Cabinet - 30"W x 15"H x 12"D - 2D	25	1.4				
W3315	Wall Cabinet - 33"W x 15"H x 12"D - 2D	28	1.6				
W3615	Wall Cabinet - 36"W x 15"H x 12"D - 2D	30	1.7				
W3915	Wall Cabinet - 39"W x 15"H x 12"D - 2D	35	1.9				

WALL CABINETS - 18"H

ITEM	PRODUCT DESCRIPTION	WEIGHT	CUBE	CW / CS	SE	SW / GR	FW
W3018	Wall Cabinet - 30"W x 18"H x 12"D - 2D	28	1.7				
W3018GD	Wall Cabinet - 30"W x 18"H x 12"D - 2D	22	1.7				
W3318	Wall Cabinet - 33"W x 18"H x 12"D - 2D	32	1.9				
W3618	Wall Cabinet - 36"W x 18"H x 12"D - 2D	35	2				

WALL CABINETS - 24"H

ITEM	PRODUCT DESCRIPTION	WEIGHT	CUBE	CW / CS	SE	SW / GR	FW
W3024	Wall Cabinet - 30"W x 24"H x 12"D - 2D - 1S	30	2.2				
W3324	Wall Cabinet - 33"W x 24"H x 12"D - 2D - 1S	33	2.4				
W3624	Wall Cabinet - 36"W x 24"H x 12"D - 2D - 1S	35	2.6				
W3924	Wall Cabinet - 39"W x 24"H x 12"D - 2D - 1S	37	2.8				

WALL CABINETS - 30"H

ITEM	PRODUCT DESCRIPTION	WEIGHT	CUBE	CW / CS	SE	SW / GR	FW
W0930	Wall Cabinet - 09"W x 30"H x 12"D - 1D -2S	28	1				
W1230	Wall Cabinet - 12"W x 30"H x 12"D - 1D -2S	31	1.2				
W1530	Wall Cabinet - 15"W x 30"H x 12"D - 1D -2S	36	1.6				
W1530GD	Wall Glass Door Cabinet - 15"W x 30"H x 12"D - 1D -2S	36	1.8				
W1830	Wall Cabinet - 18"W x 30"H x 12"D - 1D - 2S	41	1.8				
W1830GD	Wall Glass Door Cabinet - 18"W x 30"H x 12"D - 1D -2S	40	2.2				
W2130	Wall Cabinet - 21"W x 30"H x 12"D - 1D -2S	45	2.1				
W2430	Wall Cabinet - 24"W x 30"H x 12"D - 2D -2S	52	2.4				
W2430GD	Wall Glass Door Cabinet - 24"W x 30"H x 12"D - 2D -2S	51	2.8				
W2730	Wall Cabinet - 27"W x 30"H x 12"D - 2D -2S	56	2.7				
W3030	Wall Cabinet - 30"W x 30"H x 12"D - 2D -2S	60	2.7				
W3030GD	Wall Glass Door Cabinet - 30"W x 30"H x 12"D -2D-2S	56	2.4				
W3330	Wall Cabinet - 33"W x 30"H x 12"D - 2D -2S	65	2.9				
W3630	Wall Cabinet - 36"W x 30"H x 12"D - 2D -2S	69	3.2				
W3930	Wall Cabinet - 39"W x 30"H x 12"D - 2D -2S	72	3.4				
W4230	Wall Cabinet - 42"W x 30"H x 12"D - 2D -2S	75	3.6				
W4830	Wall Cabinet - 48"W x 30"H x 12"D - 2D -2S	77	3.8				

WALL CABINETS - 36"H

ITEM	PRODUCT DESCRIPTION	WEIGHT	CUBE	CW / CS	SE	SW / GR	FW
W0936	Wall Cabinet - 09"W x 36"H x 12"D - 1D -2S	32	1.4				
W1236	Wall Cabinet - 12"W x 36"H x 12"D - 1D -2S	36	1.4				
W1536	Wall Cabinet - 15"W x 36"H x 12"D - 1D -2S	41	1.8				
W1536GD	Wall Glass Door Cabinet - 15"W x 36"H x 12"D - 1D -2S	41	2.2				
W1836	Wall Cabinet - 18"W x 36"H x 12"D - 1D -2S	46	2.2				
W1836GD	Wall Glass Door Cabinet - 18"W x 36"H x 12"D - 1D -2S	44	2.4				
W2136	Wall Cabinet - 21"W x 36"H x 12"D - 1D -2S	51	2.5				
W2436	Wall Cabinet - 24"W x 36"H x 12"D - 2D -2S	59	2.8				
W2436GD	Wall Glass Door Cabinet - 24"W x 36"H x 12"D - 2D -2S	59	2.8				
W2736	Wall Cabinet - 27"W x 36"H x 12"D - 2D -2S	64	3.2				
W3036	Wall Cabinet - 30"W x 36"H x 12"D - 2D -2S	68	3.2				
W3036GD	Wall Glass Door Cabinet - 30"W x 36"H x 12"D -2D- 2S	63	3				
W3336	Wall Cabinet - 33"W x 36"H x 12"D - 2D -2S	73	3.5				
W3636	Wall Cabinet - 36"W x 36"H x 12"D - 2D -2S	78	3.7				
W3936	Wall Cabinet - 39"W x 36"H x 12"D - 2D -2S	81	4				
W4236	Wall Cabinet - 42"W x 36"H x 12"D - 2D -2S	83	4.2				
W4836	Wall Cabinet - 48"W x 36"H x 12"D - 2D -2S	85	4.4				

WALL CABINETS - 42"H

ITEM	PRODUCT DESCRIPTION	WEIGHT	CUBE	CW / CS	SE	SW / GR	FW
W0942	Wall Cabinet - 09"W x 42"H x 12"D - 1D - 3S	37	1.6				
W1242	Wall Cabinet - 12"W x 42"H x 12"D - 1D- 3S	41	1.6				
W1542	Wall Cabinet - 15"W x 42"H x 12"D - 1D - 3S	48	2.1				
W1542GD	Wall Glass Door Cabinet - 15"W x 42"H x 12"D - 1D- 3S	47	2.5				
W1842	Wall Cabinet - 18"W x 42"H x 12"D - 1D -3S	54	2.5				
W1842GD	Wall Cabinet - 18"W x 42"H x 12"D - 1D -3S	54	2.5				
W2142	Wall Cabinet - 21"W x 42"H x 12"D - 1D -3S	60	2.8				
W2442	Wall Cabinet - 24"W x 42"H x 12"D - 2D -3S	68	3.2				
W2442GD	Wall Glass Door Cabinet - 24"W x 42"H x 12"D - 2D -3S	60	2.8				
W2742	Wall Cabinet - 27"W x 42"H x 12"D - 2D -3S	68	4.4				
W3042	Wall Cabinet - 30"W x 42"H x 12"D - 2D -3S	80	3.6				
W3042GD	Wall Glass Door Cabinet - 30"W x 42"H x 12"D -2D- 2S	75	3.2				
W3342	Wall Cabinet - 33"W x 42"H x 12"D - 2D -3S	85	4				
W3642	Wall Cabinet - 36"W x 42"H x 12"D - 2D -3S	91	4.3				
W3942	Wall Cabinet - 39"W x 36"H x 12"D - 2D -2S	93	4.5				
W4242	Wall Cabinet - 42"W x 36"H x 12"D - 2D -2S	95	4.8				
W4842	Wall Cabinet - 48"W x 36"H x 12"D - 2D -2S	98	5.1				

ANGLE WALL CABINETS

ITEM	PRODUCT DESCRIPTION	WEIGHT	CUBE	CW / CS	SE	SW / GR	FW
AW1230	Angle Wall Cabinet - 12"W x 30"H x 12"D - 1D -2S	32	1.7				
AW1236	Angle Wall Cabinet - 12"W x 36"H x 12"D - 1D -2S	36	2				
AW1242	Angle Wall Cabinet - 12"W x 42"H x 12"D - 1D -3S	41	2.4				

DIAGONAL WALL CABINETS

ITEM	PRODUCT DESCRIPTION	WEIGHT	CUBE	CW / CS	SE	SW / GR	FW
DCW2412GD	Wall Diagonal Glass Door Corner Cabinet -24"W x 12"H x 12"D - 1D -2S	36	1.7				
DCW2430	Wall Diagonal Corner Cabinet - 24"W x 30"H x 12"D - 1D -2S	70	3.1				
DCW2430GD	Wall Diagonal Glass Door Corner Cabinet - 24"W x 30"H x 12"D - 1D -2S	70	3.1				
DCW2436	Wall Diagonal Corner Cabinet - 24"W x 36"H x 12"D - 1D- 2S	77	3.6				
DCW2436GD	Wall Diagonal Glass Door Corner Cabinet - 24"W x 36"H x 12"D - 1D-2S	77	3.6				
DCW2442	Wall Diagonal Corner Cabinet - 24"W x 42"H x 12"D - 1D -3S	92	4.1				
DCW2442GD	Wall Diagonal Glass Door Corner Cabinet - 24"W x 42"H x 12"D - 1D -3S	92	4.1				
DCW2712GD	Wall Diagonal Glass Door Corner Cabinet - 27"W x 12"H x 12"D x 1D -3S	56	1.8				
DCW2736	Wall Diagonal Corner Cabinet - 27"W x 36"H x 12"D - 1D -3S	110	4.6				
DCW2742	Wall Diagonal Corner Cabinet - 27"W x 42"H x 12"D - 1D -3S	110	4.6				

BLIND CORNER WALL CABINETS

ITEM	PRODUCT DESCRIPTION	WEIGHT	CUBE	CW / CS	SE	SW / GR	FW
WBC2430	Wall Blind Corner Cabinet - 24"W x 30"H x 12"D - 1D -2S	51	2.5				
WBC2730	Wall Blind Corner Cabinet - 27"W x 30"H x 12"D - 1D -2S	53	2.7				
WBC3630	Wall Blind Corner Cabinet - 36"W x 30"H x 12"D - 1D -2S	56	2.8				
WBC2736	Wall Blind Corner Cabinet - 27"W x 36"H x 12"D - 1D -2S	59	3.2				
WBC2442	Wall Blind Corner Cabinet - 24"W x 42"H x 12"D - 1D -3S	66	3.4				
WBC2742	Wall Blind Corner Cabinet - 27"W x 42"H x 12"D - 1D -3S	69	3.6				
WBC3642	Wall Blind Corner Cabinet - 27"W x 36"H x 12"D - 1D -3S	71	3.8				

REFRIGERATOR WALL CABINETS

ITEM	PRODUCT DESCRIPTION	WEIGHT	CUBE	CW / CS	SE	SW / GR	FW
W301224	Wall Refrigerator Cabinet-30"W x 12"H x 24"D - 2D	30	1.2				
W331224	Wall Refrigerator Cabinet-33"W x 12"H x 24"D - 2D	34	1.4				
W361224	Wall Refrigerator Cabinet - 36"W x 12"H x 24"D - 2D	40	2.8				
W301524	Wall Refrigerator Cabinet - 30"W x 15"H x 24"D - 2D	33	1.6				
W331524	Wall Refrigerator Cabinet - 33"W x 15"H x 24"D -2D	37	1.6				
W361524	Wall Refrigerator Cabinet - 36"W x 15"H x 24"D - 2D	43	2.5				
W301824	Wall Refrigerator Cabinet - 30"W x 18"H x 24"D - 2D	37	1.7				
W331824	Wall Refrigerator Cabinet - 33"W x 18"H x 24"D -2D	41	1.9				
W361824	Wall Refrigerator Cabinet - 36"W x 18"H x 24"D - 2D	45	1.9				
W302424	Wall Refrigerator Cabinet - 30"W x 24"H x 24"D - 2D -1S	53	2.3				
W332424	Wall Refrigerator Cabinet -33"W x 24"H x 24"D-2D -1S	56	2.5				
W362424	Wall Refrigerator Cabinet - 36"W x 24"H x 24"D - 2D -1S	50	2.6				

WALL ACCESSORY CABINETS

ITEM	PRODUCT DESCRIPTION	WEIGHT	CUBE	CW / CS	SE	SW / GR	FW
OE630	Wall End Shelf - 6"W x 30"H x 12"D - 2S	16	0.8				
OE636	Wall End Shelf - 6"W x 36"H x 12"D - 3S	19	0.9				
OE642	Wall End Shelf - 6"W x 42"H x 12"D - 4S	21	1				
PR3015	Wall Plate Rack Cabinet - 30"W x 15"H x 12"D	30	1.7				
WRC2430	Wall Wine Rack Cabinet - 24"W x 30"H x 12"D	40	2.6				
WRC3018	Wall Wine Rack Cabinet - 30"W x 18"H x 12"D	33	2				
WRC3015	Wall Wine Rack Cabinet - 30"W x 15"H x 12"D	30	1.8				
WSD630	Wall Spice Drawer - 30"W x 6"H x 12"D	32	1.8				

BASE CABINETS

BASE CABINETS-34 1/2"H

ITEM	PRODUCT DESCRIPTION	WEIGHT	CUBE	CW / CS	SE	SW / GR	FW
BT09	Base Cabinet - 9"W x 34-1/2"H x 24"D - 1D	38	2.0				
B12	Base Cabinet - 12"W x 34-1/2"H x 24"D - 1D, 1Drw, 1S	51	2.2				
B15	Base Cabinet - 15"W x 34-1/2"H x 24"D - 1D, 1Drw, 1S	57	2.9				
B18	Base Cabinet - 18"W x 34-1/2"H x 24"D - 1D, 1Drw, 1S	62	2.9				
B21	Base Cabinet - 21"W x 34-1/2"H x 24"D - 1D, 1Drw, 1S	66	2.9				
B24	Base Cabinet - 24"W x 34-1/2"H x 24"D - 2D, 1Drw, 1S	72	2.9				
B27	Base Cabinet - 27"W x 34-1/2"H x 24"D - 2D, 1Drw, 1S	78	3.3				
B30	Base Cabinet - 30"W x 34-1/2"H x 24"D - 2D, 2Drw, 1S	89	3.8				
B33	Base Cabinet - 33"W x 34-1/2"H x 24"D - 2D, 2Drw, 1S	94	4.0				
B36	Base Cabinet - 36"W x 34-1/2"H x 24"D - 2D, 2Drw, 1S	100	4.3				
B42	Base Cabinet - 42"W x 34-1/2"H x 24"D - 2D, 2Drw, 1S	109	4.5				
B48	Base Cabinet - 48"W x 34-1/2"H x 24"D - 2D, 2Drw, 1S	118	4.7				
MB33	Microwave Base Cabinet - 33"W x 34-1/2"H x 24"D -1Drw	94	4.0				

SINK BASES-34 1/2"H

ITEM	PRODUCT DESCRIPTION	WEIGHT	CUBE	CW / CS	SE	SW / GR	FW
SB27	Sink Base - 27"W x 34-1/2"H x 24"D - 1 False Drawer	60	3.0				
SB30	Sink Base - 30"W x 34-1/2"H x 24"D - 2 False Drawers	64	3.3				
SB33	Sink Base - 33"W x 34-1/2"H x 24"D - 2 False Drawers	70	3.5				
SB36	Sink Base - 36"W x 34-1/2"H x 24"D - 2 False Drawers	76	3.8				
CSB36	Corner Sink Base - 36"W x 34-1/2"H x 24"D	96	4.1				
DCSF42	Corner Sink Base Front - 26-1/4"W x 30"H - for use with SBF4242	29	1.5				
SBF4242	Corner Sink Front Floor - 42"W x 42"H - for use with DCSF42	23	1.0				
FSB36	Farmer Sink base 36"W	76	3.5				

DRAWER BASES - 34 1/2"H

ITEM	PRODUCT DESCRIPTION	WEIGHT	CUBE	CW / CS	SE	SW / GR	FW
3DB12	Drawer Base Cabinet - 12"W x 34-1/2"H x 24"D - 3DRW	75	3.0				
3DB15	Drawer Base Cabinet - 15"W x 34-1/2"H x 24"D - 3DRW	82	3.2				
3DB18	Drawer Base Cabinet - 18"W x 34-1/2"H x 24"D - 3DRW	89	3.7				
3DB21	Drawer Base Cabinet - 21"W x 34-1/2"H x 24"D - 3DRW	95	3.8				
3DB24	Drawer Base Cabinet - 24"W x 34-1/2"H x 24"D - 3DRW	102	3.8				
3DB30	Drawer Base Cabinet - 30"W x 34-1/2"H x 24"D - 3DRW	117	4.6				
3DB36	Drawer Base Cabinet - 36"W x 34-1/2"H x 24"D - 3DRW	132	5.5				

ANGLE CORNER CABINETS

ITEM	PRODUCT DESCRIPTION	WEIGHT	CUBE	CW / CS	SE	SW / GR	FW
BEC24	Base End Cabinet - 24"W x 34-1/2"H x 24"D - 2D	76	2.8				

LAZY SUSAN BASE CABINETS

ITEM	PRODUCT DESCRIPTION	WEIGHT	CUBE	CW / CS	SE	SW / GR	FW
ERB33	Easy Reach Base Cabinet - 33"W x 34-1/2"H - 1D	89	4.1				
ERB36	Easy Reach Base Cabinet - 36"W x 34-1/2"H - 1D	99	4.6				
LSB33-C	Lazy Susan Cabinet - 33"W x 34-1/2"H - 1D (Chrome Basket)	89	4.1				
LSB36-C	Lazy Susan Cabinet - 36"W x 34-1/2"H - 1D (Chrome Basket)	99	4.6				
LSB33-W	Lazy Susan Cabinet - 33"W x 34-1/2"H - 1D (Wood Basket)	92	4.1				
LSB36-W	Lazy Susan Cabinet - 36"W x 34-1/2"H - 1D (Wood Basket)	102	4.6				

BLIND CORNER BASE CABINETS

ITEM	PRODUCT DESCRIPTION	WEIGHT	CUBE	CW / CS	SE	SW / GR	FW
BBC36	Blind Base Corner Cabinet - 27"W x 34-1/2"H x 24"D -1D, 1Drw, 1S *Install range 37" min., 40" max; Specify Left/Right Hinge assembly	70	3.5	346	328	311	243
BBC42	Blind Base Corner Cabinet - 39"W x 34-1/2"H x 24"D -1D, 1Drw, 1S *Install range 43" min., 46" max; Specify Left/Right Hinge assembly	87	4.6	421	399	378	395

ACCESSORY BASE CABINETS

ITEM	PRODUCT DESCRIPTION	WEIGHT	CUBE	CW / CS	SE	SW / GR	FW
BES12	Base End Shelf Cabinet - 12"W x 34-1/2"H x 24"D	52	1.6				
BSDC6	Base Spice Drawer - 34 1/2"W x 24"H x 6"D - 5DRW	30	1.5				
DFB18	Two Drawer Base Cabinet - 18"	68	2.7				
BWB18	Base Waste Basket - 18" x 34 1/2 x 24	75	3.2				
SPB6	Spice Pull Base Cabinet - 6"W x 34-1/2"H x 24"D	32	1.6				
SPB9	Spice Pull Base Cabinet - 9"W x 34-1/2"H x 24"D	32	1.6				

OVEN CABINETS & PANTRIES

OVEN CABINETS

ITEM	PRODUCT DESCRIPTION	WEIGHT	CUBE	CW / CS	SE	SW / GR	FW
O308424	Oven Cabinet - 30"W x 84"H X 24"D - 2D, 3DRW, 1S	200	8.6				
O309024	Oven Cabinet - 30"W x 90"H X 24"D - 2D, 3DRW, 1S	215	9				
O309624	Oven Cabinet - 30"W x 96"H X 24"D - 2D, 3DRW, 1S	233	9.5				
O338424	Oven Cabinet - 33"W x 84"H X 24"D - 2D, 3DRW, 1S	215	9				
O339024	Oven Cabinet - 33"W x 90"H X 24"D - 2D, 3DRW, 1S	233	9.6				
O339624	Oven Cabinet - 33"W x 96"H X 24"D - 2D, 3DRW, 1S	242	10.2				

MICROWAVE OVEN CABINETS

ITEM	PRODUCT DESCRIPTION	WEIGHT	CUBE	CW / CS	SE	SW / GR	FW
MO3030	Microwave Oven Cabinet - 30"W x 30"H x 12"D - 2D, 1S	51	2.9				
MO3036	Microwave Oven Cabinet - 30"W x 36"H x 12"D - 2D, 1S	59	3.4				
MO3042	Microwave Oven Cabinet - 30"W x 42"H x 12"D - 2D, 1S	66	4				

TALL PANTRIES

ITEM	PRODUCT DESCRIPTION	WEIGHT	CUBE	CW / CS	SE	SW / GR	FW
U188424	Wall Pantry - 18"W x 84"H x 24"D - 2D, 5S	136	6.6				
U248424	Wall Pantry - 24"W x 84"H x 24"D - 4D, 5S	165	6.7				
U308424	Wall Pantry - 30"W x 84"H x 24"D - 4D, 5S	194	6.8				
U189024	Wall Pantry - 18"W x 90"H x 24"D - 2D, 5S	143	7				
U249024	Wall Pantry - 24"W x 90"H x 24"D - 4D, 5S	172	7.1				
U309024	Wall Pantry - 30"W x 90"H x 24"D - 4D, 5S	201	7.2				
U189624	Wall Pantry - 18"W x 96"H x 24"D - 2D, 5S	150	7.5				
U249624	Wall Pantry - 24"W x 96"H x 24"D - 4D, 5S	180	7.6				
U309624	Wall Pantry - 30"W x 96"H x 24"D - 4D, 5S	210	7.7				

VANITIES

VANITY SINK CABINETS

ITEM	PRODUCT DESCRIPTION	WEIGHT	CUBE	CW / CS	SE	SW / GR	FW
VS24	Vanity Sink Base Cabinet - 24"W x 34 1/2"H x 21"D	56	2.6				
VS27	Vanity Sink Base Cabinet - 27"W x 34 1/2"H x 21"D	60	2.9				
VS30	Vanity Sink Base Cabinet - 30"W x 34 1/2"H x 21"D	64	3.2				
VS36	Vanity Sink Base Cabinet - 36"W x 34 1/2"H x 21"D	73	3.8				

VANITY DRAWER CABINETS

ITEM	PRODUCT DESCRIPTION	WEIGHT	CUBE	CW / CS	SE	SW / GR	FW
3VDB12	Vanity Drawer Base Cabinet - 12"W x 34 1/2"H x 21"D - 3 DRW	68	2.8				
3VDB15	Vanity Drawer Base Cabinet - 15"W x 34 1/2"H x 21"D - 3 DRW	74	2.8				
3VDB18	Vanity Drawer Base Cabinet - 18"W x 34 1/2"H x 21"D - 3 DRW	80	2.8				

VANITY COMBINATION CABINETS

ITEM	PRODUCT DESCRIPTION	WEIGHT	CUBE	CW / CS	SE	SW / GR	FW
V3021DL	Vanity Sink Base - 30"W x 34 1/2" x 21"D - 1D, 3 Left DRW	96	4.6				
V3021DR	Vanity Sink Base - 30"W x 34 1/2" x 21"D - 1D, 3 Right DRW	96	4.6				
V3621DL	Vanity Sink Base - 36"W x 34 1/2" x 21"D - 1D, 3 Left DRW	106	5.3				
V3621DR	Vanity Sink Base - 36"W x 34 1/2" x 21"D - 1D, 3 Right DRW	106	5.3				
VSD36	Vanity Sink Drawer Base Cabinet - 36"W x 34 1/2"H x 21"D - 2 DRW	85	3.8				
VSD42	Vanity Sink Drawer Base Cabinet - 42"W x 34 1/2"H x 21"D - 2 DRW	95	4.3				
VSD48	Vanity Sink Drawer Base Cabinet - 48"W x 34 1/2"H x 21"D - 2 DRW	104	4.9				

MOULDINGS

MOULDINGS

ITEM	PRODUCT DESCRIPTION	WEIGHT	CUBE	CW / CS	SE	SW / GR	FW
BAM	Batten Moulding - 96"W x 3/4"H x 1/4"D	1	0				
BCM8 (DCM)	Decorative Crown Moulding - 96"W x 4 3/8"H x 11/16"D	7	0.2				
CM8	Crown Moulding - 96"W x 2 3/4"H x 5/8"D	4	0.1				
COV	Cove Crown Moulding - 96"W x 3 5/8"H x 2 1/2"D	10	0.3				
ACM8	Angle Crown Moulding - 96"W x 3 5/8"H x 2 1/2"D	1	0.3				
DMTIS	Dentil Moulding - 96"W x 11/16"H x 3/8"D	1	0				
FBM	Furniture Base MOULDING - 96"W x 4 5/8"H x 3/4"D	11	0.3				
LRM8	Light Rail Moulding - 96"W x 1 9/16"H x 2 1/4"D	5	0.1				
ALRM8	Angle Light Trail Molding - 96"W x 1 9/16"H x 2 1/4"D	1	0.3				
OCM8	Outside Corner Moulding - 96"W x 3/4"H x 3/4"D	2	0				
RCM4S (LCM)	Inset Crown Moulding - 96"W x 4 3/16"H x 7/8"D	8	0.3				
ROPE	Rope Moulding - 96"W x 3/4"H x 3/8"D	1	0				
SHM	Shoe Moulding - 96"W x 11/16"H x 11/15"D	1	0				
SMB (SCR)	Scribe Moulding - 96"W x 1/4"H x 5/8"D	1	0				

FILLERS & PANELS

FILLERS

ITEM	PRODUCT DESCRIPTION	WEIGHT	CUBE	CW / CS	SE	SW / GR	FW
F342	Wall Filler - 3"W x 42"H x 3/4"D	3	0.1				
F396	Tall Filler - 3"W x 96"H x 3/4"D	6	0.2				
F642	Wall Filler - 6"W x 42"H x 3/4"D	6	0.2				
F696	Tall Filler - 6"W x 96"H x 3/4"D	12	0.4				
FF396	Fluted Tall Filler - 3"W x 96"H x 3/4"D	7	0.2				

PANELS

ITEM	PRODUCT DESCRIPTION	WEIGHT	CUBE	CW / CS	SE	SW / GR	FW
BBFPV4296	Finished Bead Board Plywood Panel - 96"W x 42"H x 1/4"D	47	2.4				
BDEP	Base Decorative Door Panel - 23 1/2"W x 29"H	18	0.7				
BSV	Base Skin Veneer Panel - 23 1/4"W x 34 1/2"H x 1/4"D	4	0.1				
DWR3	Dishwasher Return Panel w/3"W Filler - 24"W X 34-1/2"H X 1/2"D	16	0.8				
FPV4296	Finished Plywood Panel - 96"W x 42"H x 1/4"D	47	2.4				
REPV2496	Refrigerator End Panel Veneer - 24"W x 96"H x1 1/2"D	41	2.2				
REPV2796	Refrigerator End Panel Veneer - 27"W x 96"H x1 1/2"D	45	2.6				
TKC	Toe Kick 8' Plywood - 96"W x 4 1/2"H x 1/8"D	2	0.1				
USV2496	Tall Skin Veneer Panel - 23 1/4" W x 96"H x 1/4"D	10	0.4				
WDEP30	Wall Decorative Door Panel - 11 1/2"W x 29"H	10	0.4				
WDEP36	Wall Decorative Door Panel - 11 1/2"W x 35"H	12	0.4				
WDEP42	Wall Decorative Door Panel - 11 1/2"W x 41"H	14	0.5				
TDEP2484	Tall Decorative Door Panel - 23 1/2" W x 78 1/2"H	30	0.3				
TDEP2490	Tall Decorative Door Panel - 23 1/2" W x 84 1/2"H	30	0.3				
TDEP2496	Tall Decorative Door Panel - 23 1/2" W x 901/2"H	30	0.3				
WSV42	Wall Skin Panel - 15"W x 42"H x 1/4"D	3	0.1				

ACCESSORIES

ACCESSORIES

ITEM	PRODUCT DESCRIPTION	WEIGHT	CUBE	CW / CS	SE	SW / GR	FW
CB9	Corbel - 2"W x 9"H x 9"D	3	0.1				
CBT	Corbel - 3"W x 12 3/4"H x 6"D	6	0.2				
CLDL	Classic Decorative Leg - 3"W x 34 1/2"H x 3"D	10	0.3				
FLDL	Fluted Decorative Leg - 3"W x 34 1/2"H x 3"D	10	0.3				
S2496	Shelf Board - 24"W x 96"H X 3/4"D	37	1.4				
SGH30	Stem Wine Glass Holder - 30"W x 1 1/2"H x 12"D	10	0.6				
VA36	Arched Valance - 36"W x 6"H x 3/4"D	4	0.1				
VA42	Arched Valance - 42"W x 6"H x 3/4"D	5	0.2				
VA48	Arched Valance - 48"W x 6"H x 3/4"D	6	0.2				
VKD36	Knee Drawer - 36"W x 7"H x 21"D	29	1.6				
HOOD	Hood	35	2.1				

TRAYS

ITEM	PRODUCT DESCRIPTION	WEIGHT	CUBE	CW / CS	SE	SW / GR	FW
RS18	Roll Out Tray - Fits B18	11	0.5				
RS21	Roll Out Tray - Fits B21	12	0.6				
RS24	Roll Out Tray - Fits B24	14	0.7				
RS27	Roll Out Tray - Fits B27	15	0.8				
RS30	Roll Out Tray - Fits B30	16	0.9				
RS33	Roll Out Tray - Fits B33	17	0.9				
RS36	Roll Out Tray - Fits B36	18	1				

SAMPLE DOORS

ITEM	PRODUCT DESCRIPTION	WEIGHT	CUBE	CW / CS	SE	SW / GR	FW
SD	Sample Door - 11"W x 15"H	7	0.1				

SANYANG
WOOD INDUSTRY CO.,LTD.

SANYANG®

WELCOME

Thank you for choosing sanyang cabinets , our commitment to quality ,service and delivery time affordability will make our relationship a favorable one. It is our goal at sanyang cabinet to always have the cabinets fast delivery and best quality at right price .

1. Sanyang cabinets is based shouguang shandong ,china 262700 , with more than 1300 workers and more than 400 containers per month cabinets products ability .
2. Sanyang cabinets have Two warehouse in USA with more than 160000 sku's in stock .always have stock every time .
3. Sayang cabinets have factory in russia for the raw solid birch wood material to support have enough good material to produce on time .
4. Sanyang cabinets have frame and frameless cabinets and highglossy cabinets two products line, more than 10 Style design in stock
5. Sanyang cabinets have more than 90000 sqm factory area to gurantee all order delivery within in 6 weeks .
6. Sanyang cabinets have the quality cerficate , CARB ,CE , ISO9001 ,And the muber of NKBA & KCMA
7. Sanyang cabinets have the VOC products system to provide the best healthy oil painting kitchen cabinet

Once again ,we appreciated your support and our deepest thanks for the opportunity to serve you

Sincerely

Sang Jun De

Preident of sanyang wood